Attachment K

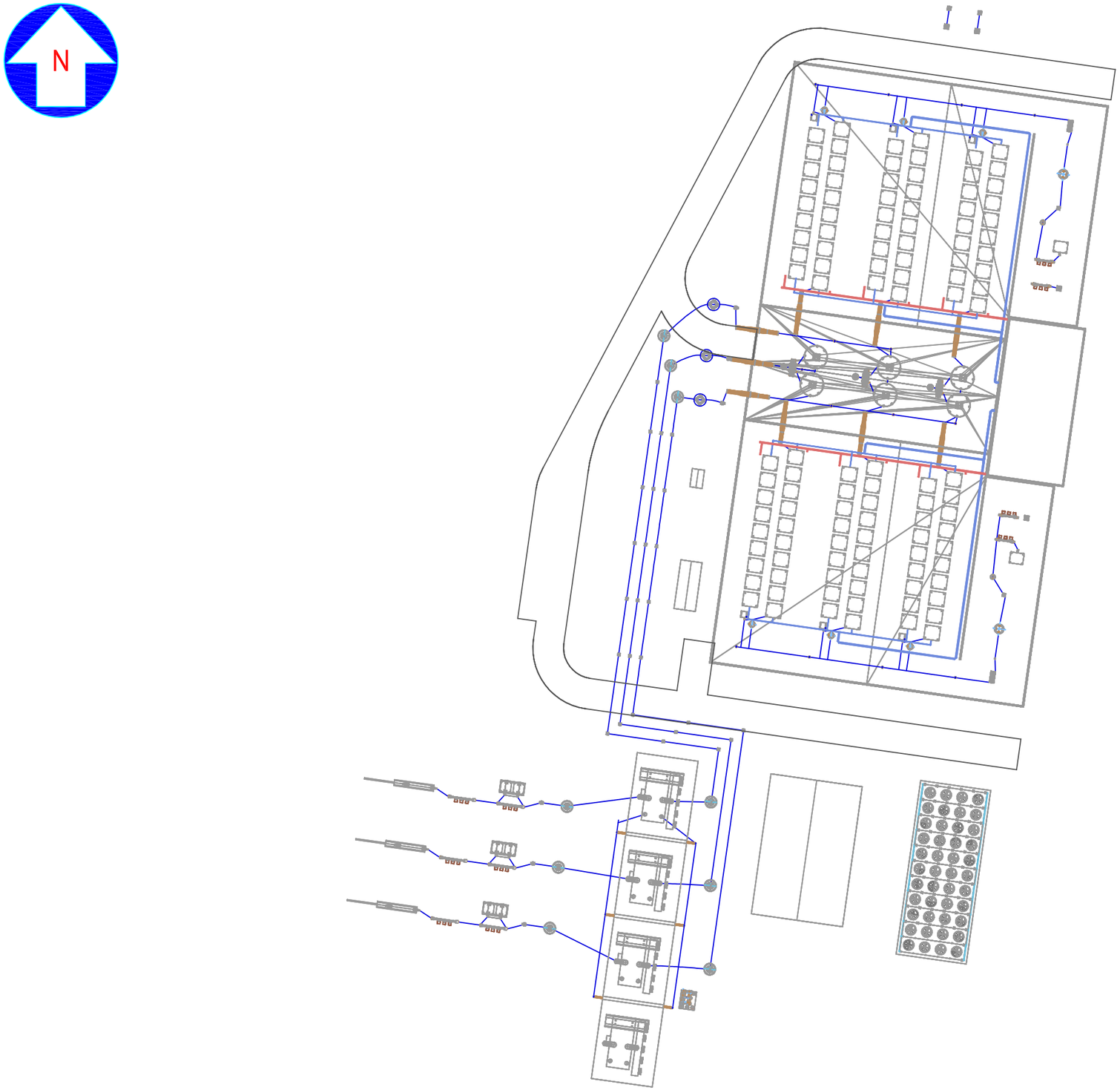

Designed	JAQ
Drawn	CMH
Checked	.
Approved	.
Scale	NTS

No.	Revision	Date	By	Ck	PE	PE #
.	.	.	.	.	.	.

Transmission Developers Inc.

Champlain-Hudson Power Express Project

Champlain-Hudson Power Express Inc.

SK-1

WELLS HVDC - PLAN

Sheet 1 of 3

Prepared by: HDR | DTA & TRC 6/23/2010

Designed	JAQ
Drawn	CMH
Checked	.
Approved	.
Scale	NTS

No.	Revision	Date	By	Ck	PE	PE #
.	.	.	.	.	.	.

Transmission Developers Inc.

Champlain-Hudson Power Express Project

Champlain-Hudson Power Express Inc.

SK-2

WELLS HVDC - ELEVATION

Sheet 2 of 3

Prepared by: HDR | DTA & TRC 6/23/2010

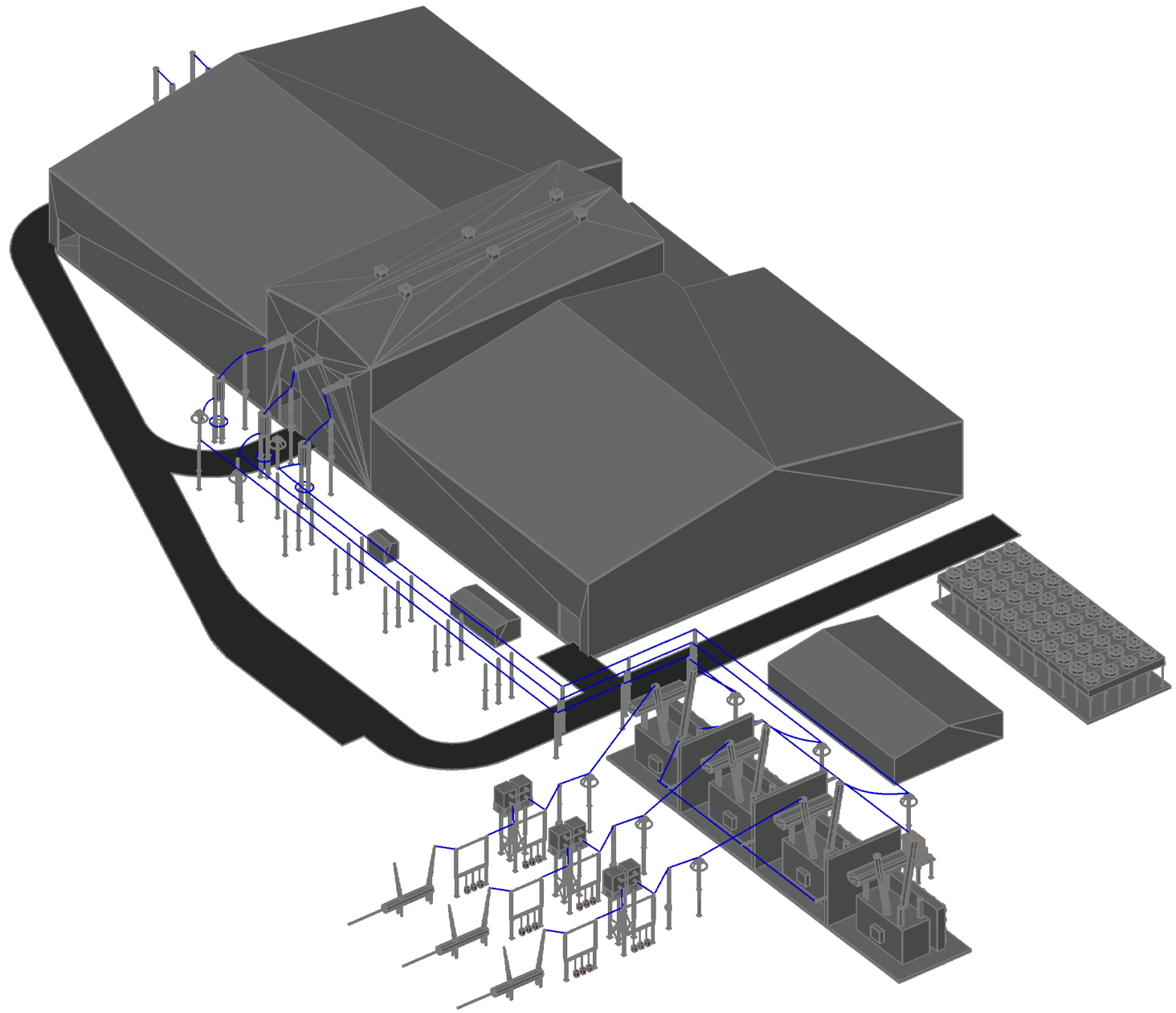

Designed	JAQ
Drawn	CMH
Checked	.
Approved	.
Scale	NTS

No.	Revision	Date	By	Ck	PE	PE #
.	.	.	.	.	.	.

Transmission Developers Inc.

Champlain-Hudson Power Express Project

Champlain-Hudson Power Express Inc.

SK-3

WELLS HVDC - ISOMETRIC

Sheet 3 of 3

Prepared by: HDR | DTA & TRC 6/23/2010

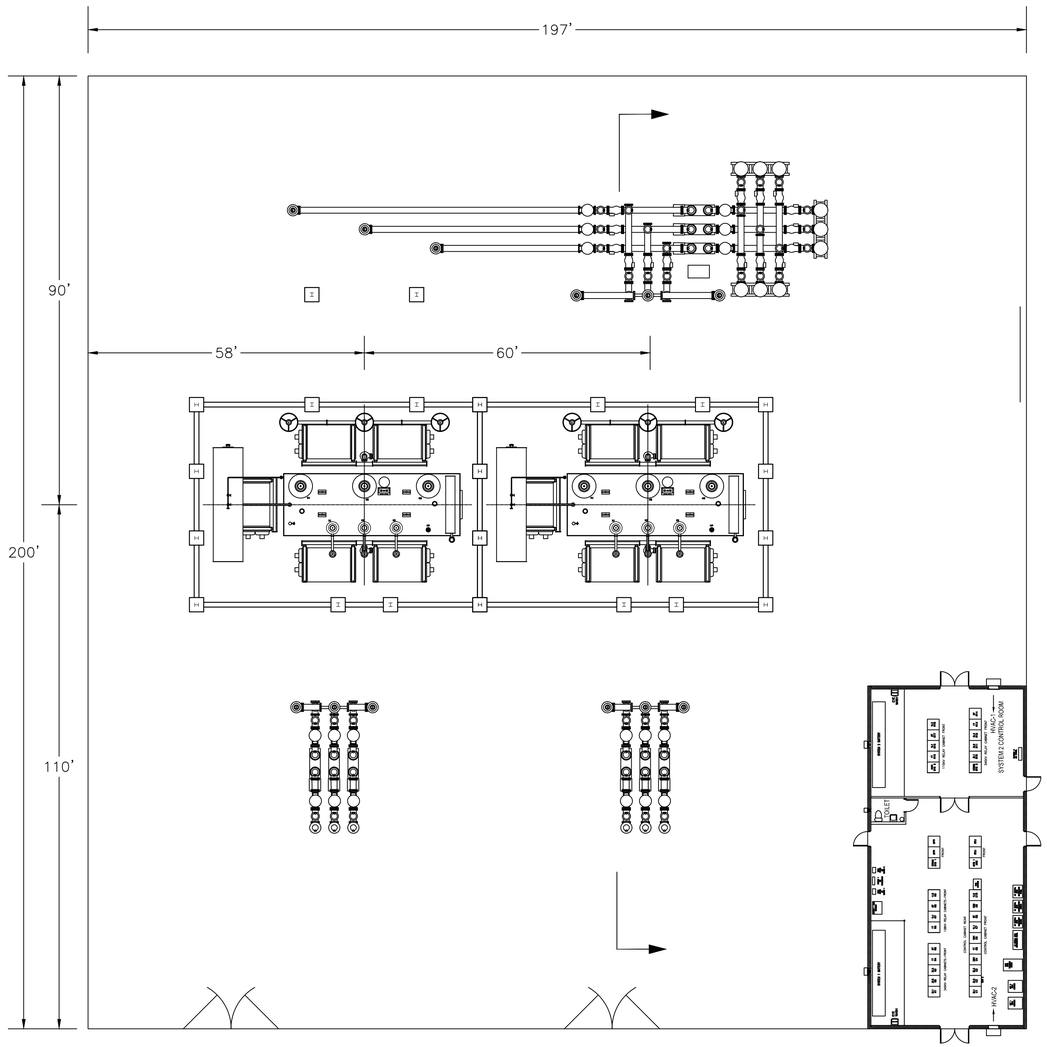

ASSUMPTIONS

1. AUTOTRANSFORMER ENVELOPE 35'6" X 53' – CONTAINMENT PERIMETER 3' ALL AROUND AUTOTRANSFORMER ENVELOPE
2. AUTOTRANSFORMER DELTA TERTIARY LEADS NOT BROUGHT OUT FOR LOADING

Designed	JAQ
Drawn	JLB
Checked	.
Approved	.
Scale	1/16" = 1'-0"

No.	Revision	Date	By	Ck	PE	PE #
.	.	.	.	.	.	.

Transmission Developers Inc.

Champlain-Hudson Power Express Project

Champlain-Hudson Power Express Inc.

SK-1

Sherman Creek - Plan View

Sheet 1 of 2

Prepared by: HDR | DTA & TRC 6/24/2010

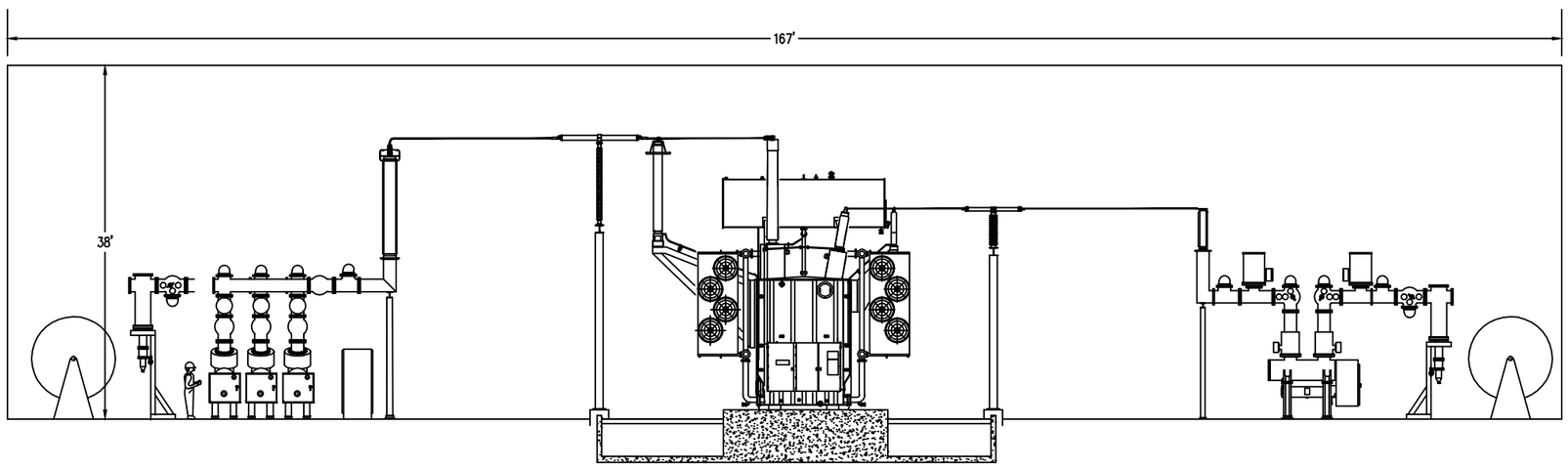

Designed	JAQ
Drawn	JLB
Checked	.
Approved	.
Scale	1/16" = 1'-0"

No.	Revision	Date	By	Ck	PE	PE #
.	.	.	.	.	.	.

Transmission Developers Inc.

Champlain-Hudson Power Express Project

Champlain-Hudson Power Express Inc.

SK-2

Sherman Creek - Elevation

Sheet 2 of 2

Prepared by: HDR | DTA & TRC 2/17/2010

□a□le □ □ailr□a□ an□ □□a□ Cr□□□e□ □□ □he C□P□ Pr□□e□□				
□P	Cr□□□in□ □□□e	Cr□□□in□ □ame	C□□n□□ □ame	□ □ni□i□ali□□
0.9	Road	US Route 2 N	Clinton	Champlain
1.2	Road	Structure	Clinton	Champlain
24.2	Road	Plattsburgh-Grand Isle	Clinton	Plattsburgh
39.2	Road	Burlington-Port Kent	Essex	Chesterfield
53.6	Road	Essex-Charlotte	Essex	Essex
75.3	Road	Bridge Rd	Essex	Crown Point
88.7	Road	Fort Ticonderoga-Shoreham	Essex	Ticonderoga
111.8	Railroad	Delaware and Hudson Railroad	Washington	Various
112.0	Road	Railroad Ave	Washington	Whitehall
112.1	Road	Northeast St	Washington	Whitehall
112.8	Road	Clinton St	Washington	Whitehall
112.9	Road	Division St	Washington	Whitehall
113.0	Road	Saunders St	Washington	Whitehall
113.4	Road	Poultney St	Washington	Whitehall
118.2	Road	Ryder Rd	Washington	Whitehall
120.3	Road	State Route 22	Washington	Fort Ann
120.8	Road	Unnamed Street	Washington	Fort Ann
121.9	Road	Unnamed Street	Washington	Fort Ann
124.3	Road	Ann St	Washington	Fort Ann
125.9	Road	Baldwin Corners Rd	Washington	Kingsbury
128.2	Road	State Route 149	Washington	Kingsbury
129.0	Road	Gravel Road	Washington	Kingsbury
130.5	Road	New Swamp Rd	Washington	Kingsbury
131.0	Road	Gravel Road	Washington	Kingsbury
132.9	Railroad	Delaware and Hudson Railroad	Saratoga, Washington	Various
132.9	Road	Rabideau Ln	Washington	Kingsbury
132.9	Road	State Route 196	Washington	Kingsbury
133.0	Road	Gravel Road	Washington	Kingsbury
135.9	Road	East St	Washington	Fort Edward
136.1	Road	Canal St	Washington	Fort Edward
136.2	Road	Broadway	Washington	Fort Edward
136.3	Road	Gravel Road	Washington	Fort Edward
137.6	Road	Gravel Road	Saratoga	Moreau
137.9	Road	Gravel Road	Saratoga	Moreau
138.1	Road	Gravel Road	Saratoga	Moreau
138.1	Road	W River Rd	Saratoga	Moreau
138.6	Road	Gravel Road	Saratoga	Moreau
139.7	Road	Clark Rd	Saratoga	Moreau

□a□le □ □ailr□a□ an□ □□a□ Cr□□□e□ □□ □he C□P□ Pr□□e□□				
□P	Cr□□□in□ □□□e	Cr□□□in□ □ame	C□□n□□ □ame	□ □ni□i□ali□□
140.8	Road	Mott Rd	Saratoga	Moreau
141.9	Road	Saunders Dr	Saratoga	Northumberland
141.9	Road	Saunders St	Saratoga	Northumberland
142.3	Road	Schuylerville Rd	Saratoga	Northumberland
142.6	Road	Gurnspring Rd	Saratoga	Northumberland
145.0	Road	Pettis Rd	Saratoga	Wilton
145.5	Road	Ballard Rd	Saratoga	Wilton
146.0	Road	Scout Rd	Saratoga	Wilton
147.0	Road	Gravel Road	Saratoga	Wilton
147.3	Road	Edie Rd	Saratoga	Wilton
147.9	Road	Gravel Road	Saratoga	Wilton
148.2	Road	Gravel Road	Saratoga	Wilton
148.8	Road	Jones Rd	Saratoga	Wilton
149.3	Road	Perry Rd	Saratoga	Wilton
149.7	Road	I 87	Saratoga	Wilton
150.2	Road	Jones Rd	Saratoga	Wilton
151.0	Road	Maple Ave	Saratoga	Wilton
152.4	Road	Clinton St	Saratoga	Greenfield
153.1	Road	Denton Rd	Saratoga	Greenfield
153.8	Road	Route 9N	Saratoga	Saratoga Springs
154.2	Road	Washington St	Saratoga	Saratoga Springs
154.5	Road	Unnamed Street	Saratoga	Saratoga Springs
154.5	Road	Grand Ave	Saratoga	Saratoga Springs
155.6	Road	Geyser Rd	Saratoga	Saratoga Springs
157.1	Road	Gravel Road	Saratoga	Saratoga Springs
157.5	Road	Gravel Road	Saratoga	Saratoga Springs
158.1	Road	Gravel Road	Saratoga	Saratoga Springs
158.2	Road	Ballston Ave	Saratoga	Saratoga Springs
158.5	Road	Northline Rd	Saratoga	Saratoga Springs
159.3	Road	Malta Ave	Saratoga	Milton
159.9	Road	E High St	Saratoga	Milton
160.6	Road	Zepko Ln	Saratoga	Ballston
161.8	Road	State Hwy 67	Saratoga	Ballston
163.2	Road	Powers Ln	Saratoga	Ballston
163.2	Road	Outlet Rd	Saratoga	Ballston
163.6	Road	Connolly Rd	Saratoga	Ballston
164.0	Road	Saunders Ln	Saratoga	Ballston
164.6	Road	Whites Beach Rd	Saratoga	Ballston

□a□le □ □ailr□a□ an□ □□a□ Cr□□□e□ □□ □he C□P□ Pr□□e□□				
□P	Cr□□□in□ □□□e	Cr□□□in□ □ame	C□□n□□ □ame	□ □ni□i□ali□□
166.6	Road	Main St	Saratoga	Ballston
166.8	Road	Paved Road	Saratoga	Ballston
167.1	Railroad	D and H Railroad	Schenectady	Various
168.0	Road	Blue Barns Rd	Saratoga	Clifton Park
168.3	Road	Rustic Bridge Rd	Saratoga	Clifton Park
169.9	Road	Glenridge Rd	Schenectady	Glenville
170.1	Railroad	B and M Railroad	Schenectady	Glenville
170.6	Road	Alplaus Ave	Schenectady	Glenville
172.8	Road	Maxon Rd Ext	Schenectady	Schenectady
173.2	Road	Seneca St	Schenectady	Schenectady
173.7	Road	Nott St	Schenectady	Schenectady
173.8	Road	N Jay St	Schenectady	Schenectady
174.1	Road	Pine St	Schenectady	Schenectady
174.2	Road	Union St	Schenectady	Schenectady
174.3	Road	Liberty St	Schenectady	Schenectady
174.4	Road	State St	Schenectady	Schenectady
174.8	Road	Edison Ave	Schenectady	Schenectady
174.9	Road	Ramp	Schenectady	Schenectady
175.0	Road	Ramp	Schenectady	Schenectady
175.0	Road	Weaver St	Schenectady	Schenectady
175.0	Road	I 890	Schenectady	Schenectady
175.2	Railroad	Pc Railroad	Schenectady	Schenectady
177.3	Road	W Campbell Rd	Schenectady	Rotterdam
177.9	Railroad	D and H Railroad	Albany, Schenectady	Various
177.9	Road	Princetown Rd	Schenectady	Rotterdam
178.0	Road	Burdeck St	Schenectady	Rotterdam
178.5	Road	Mariaville Rd	Schenectady	Rotterdam
178.9	Road	Duanesburg Rd	Schenectady	Rotterdam
179.9	Road	I 90	Schenectady	Rotterdam
180.4	Road	Guilderland Ave	Schenectady	Rotterdam
181.3	Road	County Line Rd	Albany	Guilderland
182.4	Road	W Old State Rd	Albany	Guilderland
183.4	Railroad	Pc Railroad	Albany	Guilderland
183.5	Road	Western Tpke	Albany	Guilderland
184.8	Road	Frenchs Hollow Rd	Albany	Guilderland
184.8	Road	Frenchs Mill Rd	Albany	Guilderland
185.0	Road	Ramp	Albany	Guilderland
185.1	Road	State Route 146	Albany	Guilderland

□a□le □ □ailr□a□ an□ □□a□ Cr□□□e□ □□ □he C□P□ Pr□□e□□				
□P	Cr□□□in□ □□□e	Cr□□□in□ □ame	C□□n□□ □ame	□ □ni□i□ali□□
187.1	Road	Stone Rd	Albany	Guilderland
188.3	Road	Foundry Rd	Albany	New Scotland
188.7	Railroad	Delaware and Hudson Railroad	Albany	New Scotland
188.7	Road	Grove St	Albany	New Scotland
188.7	Road	N Main St	Albany	New Scotland
188.7	Road	S Main St	Albany	New Scotland
188.9	Road	Voorheesville Ave	Albany	New Scotland
189.1	Road	Maple Ave	Albany	New Scotland
190.2	Road	Youmans Rd	Albany	New Scotland
190.7	Road	New Scotland Rd	Albany	New Scotland
191.4	Road	New Scotland South Rd	Albany	New Scotland
192.3	Road	Game Farm Rd	Albany	New Scotland
192.9	Road	Delaware Tpke	Albany	New Scotland
194.6	Road	Indian Fields Rd	Albany	Bethlehem
194.6	Road	Feura Bush Rd	Albany	Bethlehem
196.5	Road	Speeder Rd	Albany	Bethlehem
196.6	Road	Old School Rd	Albany	Bethlehem
196.7	Road	Parking Lot	Albany	Bethlehem
196.8	Road	Unnamed Street	Albany	Bethlehem
198.1	Road	Unnamed Street	Albany	Bethlehem
198.5	Road	Bridge St	Albany	Bethlehem
199.0	Road	Unnamed Street	Albany	Bethlehem
199.3	Road	US Route 9W	Albany	Bethlehem
199.7	Railroad	Conrail Railroad	Albany	Bethlehem
200.9	Road	I 87	Albany	Coeymans
201.0	Road	Ramp	Albany	Coeymans
201.2	Road	River Rd	Albany	Coeymans
223.7	Road	State Route 23	Greene	Catskill
242.1	Road	State Hwy 199	Dutchess	Rhinebeck
261.2	Railroad	Abandoned Railroad	Dutchess	Poughkeepsie
261.8	Road	Mid Hudson Brg	Dutchess	Poughkeepsie
275.1	Road	I 84	Dutchess	Fishkill
290.3	Road	US Hwy 6	Westchester	Cortlandt
310.0	Road	I 87	Westchester	Greenburgh
319.4	Road	Alexander St	Westchester	Yonkers
319.4	Road	Wells Ave	Westchester	Yonkers
324.1	Railroad		New York	Manhattan
324.3	Road	Route 9A	New York	Manhattan

□a□le □ □ailr□a□ an□ □□a□ Cr□□□e□ □□ □he C□P□ Pr□□e□□				
□P	**Cr□□□in□ □□□e**	**Cr□□□in□ □ame**	**C□□n□□ □ame**	**□ □ni□i□ali□□**
324.9	Railroad	FRA ADDED	New York	Manhattan
324.9	Road	Route 9	New York	Manhattan
325.8	Road	Route 1	New York	Manhattan
326.0	Road	W 202nd St	New York	Manhattan
326.0	Road	9th Ave	New York	Manhattan
327.1	Road	I 87	New York	Manhattan
327.2	Road	I 95	New York	Manhattan
328.5	Road	Macombs Dam Bridge	Bronx	Bronx
329.0	Road	E 149th Street	Bronx	Bronx
329.4	Road	E 138th Street	Bronx	Bronx
329.6	Railroad	Pc Railroad	New York	Manhattan
330.2	Road	Willis Ave	Bronx	Bronx
330.4	Road	Triborough Bridge	New York	Manhattan
331.6	Road	Bridge	New York	Manhattan
332.6	Road	I 287	New York	Manhattan
332.9	Railroad	Pc Railroad	New York	Manhattan

□a□le □ □a□emen□□ an□ □ran□□ □□r □an□□ Cr□□□e□ □□ □he □n□erwa□er P□r□i□n □□□he C□P□ Pr□□e□□			
□ile P□□□	□a□ili□□ □□□e	□a□ili□□ □wner	□i□an□e □□ Pr□□e□□
0.8	SEWER	Village of Rouses Point	Within 500 feet of Construction Corridor
23.7	ELECTRICAL	Power Authority of the State of New York	Intersect Proposed Route
23.8	TELEPHONE	Vermont telephone Company Inc.	Intersect Proposed Route
24	SEWER	City of Plattsburg	More than 1000 feet from Construction Corridor
40.4	COMMERCIAL	Holly Corporation	More than 1000 feet from Construction Corridor
41.1	ELECTRICAL	American Telephone and Telegraph Company	Intersect Proposed Route
83.5	COMMERCIAL	International Paper	Intersect Proposed Route
83.6	COMMERCIAL	International Paper	More than 1000 feet from Construction Corridor
85.9	COMMERCIAL	International Paper	Within 500 feet of Construction Corridor
86.7	COMMERCIAL	International Paper	More than 1000 feet from Construction Corridor
88.7	ELECTRICAL	American Telephone and Telegraph Company	Intersect Construction Corridor Only
111.8	COMMERCIAL	Phineas Sanders	Intersect Proposed Route
201.6	COMMERCIAL	Thomas V. Patterson & George W. Elder	Intersect Proposed Route
201.7	RAILROAD	Hudson River Connection Railroad Corporation	Intersect Proposed Route
201.9	ELECTRICAL	Niagara Mohawk Power Corporation	Intersect Proposed Route
202.1	TELEPHONE	American Telephone and Telegraph Company	Intersect Proposed Route
204.6	COMMERCIAL	Thermo Nutrients Corporation	Within 100 feet of Construction Corridor
205.3	COMMERCIAL	Schemerhorn and Guardenier	Within 100 feet of Construction Corridor
208.9	COMMERCIAL	John Colvin	Within 100 feet of Construction Corridor
211.5	COMMERCIAL	National Ice Company	Within 100 feet of Construction Corridor
215.5	COMMERCIAL	Francis Adams	Within 100 feet of Construction Corridor
215.6	COMMERCIAL	John Burchell	Intersect Proposed Route
216	COMMERCIAL	Adelaide Lampman	More than 1000 feet from Construction Corridor
216	CONSERVATION	NYSDEC	Intersect Proposed Route

| Table
Management and Transition Plan for Construction Corridor in the Underwater Portion of the CNP Project			
Mile Post	Facility Type	Facility Owner	Distance to Project
216.6	COMMERCIAL	Harman Adams	Intersect Proposed Route
218.2	COMMERCIAL	James T. Dubois	Within 1000 feet of Construction Corridor
218.5	COMMERCIAL	Samuel T. Dubois	Within 500 feet of Construction Corridor
218.7	COMMERCIAL	Robinson Family	Within 500 feet of Construction Corridor
218.9	COMMERCIAL	Andrew C. Getty	Within 100 feet of Construction Corridor
219.1	COMMERCIAL	United States of America	More than 1000 feet from Construction Corridor
219.3	COMMERCIAL	George C. Byrne	Within 500 feet of Construction Corridor
219.5	COMMERCIAL	Evan and Phipps	Within 100 feet of Construction Corridor
220	COMMERCIAL	Knickerbocker Ice Company	More than 1000 feet from Construction Corridor
220	COMMERCIAL	Stacy Rittenhouse	More than 1000 feet from Construction Corridor
220.3	STATE OF NEW YORK	State of New York	Within 100 feet of Construction Corridor
220.9	PIPELINE	Iroquois Gas Transmission System, L. P.	Intersect Proposed Route
221	ELECTRICAL	Niagara Mohawk Power Corporation	Intersect Proposed Route
221.7	COMMERCIAL	United States of America	Intersect Proposed Route
222	COMMERCIAL	Washington Ice Company	Within 1000 feet of Construction Corridor
222.6	COMMERCIAL	William Schuneman	Intersect Proposed Route
222.6	COMMERCIAL	Gerard Person	Intersect Proposed Route
223.1	COMMERCIAL	Minot Winch	Within 100 feet of Construction Corridor
223.2	COMMERCIAL	George Burke	Intersect Construction Corridor Only
223.3	COMMERCIAL	John Goetchius	Intersect Construction Corridor Only
223.3	COMMERCIAL	Egbert Schoonmaker	Intersect Proposed Route
223.4	COMMERCIAL	Henry Demarest	Intersect Proposed Route
223.4	COMMERCIAL	Henry Demarest	Within 100 feet of Construction Corridor
223.5	COMMERCIAL	Peter Bogardus	Intersect Proposed Route
223.6	COMMERCIAL	John Bogardus	Intersect Proposed Route
224	COMMERCIAL	Maria Cole	Within 500 feet of Construction Corridor

| Table
Table Segment Plan Transmission Corridor Crossings in the Underwater Portion of the CPP Project			
Mile Post	Facility Type	Facility Owner	Distance to Project
224	COMMERCIAL	Robert Seaman	Within 100 feet of Construction Corridor
224.8	COMMERCIAL	John Cantine	Intersect Proposed Route
225	COMMERCIAL	Village of Catskill	Within 1000 feet of Construction Corridor
230	COMMERCIAL	Thomas Thompson	Within 1000 feet of Construction Corridor
245.3	ELECTRICAL	Central Hudson	Intersect Proposed Route
245.3	ELECTRICAL	Hudson Datanet	Intersect Proposed Route
245.4	ELECTRICAL	Central Hudson	Intersect Proposed Route
245.4	COMMERCIAL	Village of Rhinebeck	More than 1000 feet from Construction Corridor
245.6	ELECTRICAL	Central Hudson	Intersect Proposed Route
261	PIPELINE	Central Hudson	Intersect Proposed Route
261.1	PIPELINE	Central Hudson	Intersect Proposed Route
261.2	ELECTRICAL	Central Hudson	Intersect Proposed Route
262.1	COMMERCIAL	City of Poughkeepsie	Intersect Proposed Route
262.7	ELECTRICAL	Central Hudson	Intersect Proposed Route
265.4	COMMERCIAL	IBM	Within 500 feet of Construction Corridor
265.5	COMMERCIAL	Town of Poughkeepsie	Within 500 feet of Construction Corridor
269.3	ELECTRICAL	Central Hudson	More than 1000 feet from Construction Corridor
271	ELECTRICAL	Central Hudson	Intersect Proposed Route
271	COMMERCIAL	City of New York	Intersect Proposed Route
271.1	ELECTRICAL	Central Hudson	Intersect Proposed Route
271.2	ELECTRICAL	New York Power Authority	Intersect Proposed Route
271.3	PIPELINE	Central Hudson	Intersect Proposed Route
272	COMMERCIAL	City of New York	Within 1000 feet of Construction Corridor
275.9	ELECTRICAL	Central Hudson	Intersect Proposed Route
280.9	COMMERCIAL	CIty of New York	Intersect Proposed Route
291	ELECTRICAL	Orange and Rockland Utilities INc.	More than 1000 feet from Construction Corridor

□a□le □ □a□emen□□ an□ □ran□□ □□r □an□□ Cr□□□e□ □□ □he □n□erwa□er P□r□i□n □□□he C□P□ Pr□□e□□			
□ile P□□□	□a□ili□□ □□□e	□a□ili□□ □wner	□i□an□e □□ Pr□□e□□
294.9	ELECTRICAL	Cononsolidated Edison Company of New York, INC.	Intersect Proposed Route
295	PIPELINE	Algonquin Gas Transmission Company	Intersect Proposed Route
295	PIPELINE	Algonquin Gas Transmission Company	Intersect Proposed Route
295	PIPELINE	Algonquin Gas Transmission Company	Intersect Proposed Route
295.4	ELECTRICAL	Cononsolidated Edison Company of New York, INC.	Intersect Proposed Route
297.6	ELECTRICAL	American Telephone and Telegraph Company	Intersect Proposed Route
305.1	ELECTRICAL	American Telephone and Telegraph Company	Intersect Proposed Route
305.1	ELECTRICAL	American Telephone and Telegraph Company	Intersect Proposed Route
305.2	ELECTRICAL	American Telephone and Telegraph Company	Intersect Proposed Route
305.9	ELECTRICAL	American Telephone and Telegraph Company	Intersect Proposed Route
313.5	PIPELINE	Tennessee Gas	Intersect Proposed Route
319.3	COMMERCIAL	James Stewart	Within 100 feet of Construction Corridor
319.3	COMMERCIAL	Imogen Rockell	Within 500 feet of Construction Corridor
319.3	COMMERCIAL	James Stewart	Intersect Proposed Route
319.4	COMMERCIAL	William Lawrence	Within 500 feet of Construction Corridor
319.4	COMMERCIAL	George Frazier	Intersect Proposed Route
319.5	COMMERCIAL	William Woodworth	Within 100 feet of Construction Corridor
319.5	COMMERCIAL	William Woodworth	Within 100 feet of Construction Corridor
319.5	COMMERCIAL	Joeseph Peene	Within 100 feet of Construction Corridor
319.5	COMMERCIAL	Village of Yonkers	Within 500 feet of Construction Corridor
324	STATE OF NEW YORK	People of the State of New york	Intersect Proposed Route
324.4	COMMERCIAL	Spuyten Duyvil Rolling Mill Company	Intersect Proposed Route
324.7	COMMERCIAL	Isaac G. Johnson	Within 1000 feet of Construction Corridor
324.7	COMMERCIAL	David B. Cox	Within 500 feet of Construction Corridor
325.1	ELECTRICAL	Cononsolidated Edison Company of New York, INC.	Intersect Proposed Route
325.2	COMMERCIAL	Nathaniel P. Bailey	Intersect Proposed Route

□a□le □ □a□emen□□ an□ □ran□□ □□r □an□□ Cr□□□e□ □□ □he □n□erwa□er P□r□i□n □□□he C□P□ Pr□□e□□			
□ile P□□□	**□a□ili□□ □□□e**	**□a□ili□□ □wner**	**□i□an□e □□ Pr□□e□□**
326	ELECTRICAL	Cononsolidated Edison Company of New York, INC.	Intersect Proposed Route
326	ELECTRICAL	Cononsolidated Edison Company of New York, INC.	Intersect Proposed Route
326.1	ELECTRICAL	Cononsolidated Edison Company of New York, INC.	Intersect Proposed Route
326.2	ELECTRICAL	Cononsolidated Edison Company of New York, INC.	Intersect Construction Corridor Only
326.4	ELECTRICAL	Cononsolidated Edison Company of New York, INC.	Intersect Proposed Route
326.7	COMMERCIAL	R.W Montgomery	Within 100 feet of Construction Corridor
326.8	COMMERCIAL	James Lee	Within 100 feet of Construction Corridor
327.1	WATER	City of New York	Intersect Proposed Route
327.5	COMMERCIAL	Lewis G. Morris	Intersect Construction Corridor Only
329.5	PIPELINE	Cononsolidated Edison Company of New York, INC.	Intersect Proposed Route
329.6	COMMERCIAL	Jordan L. Mott	Within 500 feet of Construction Corridor
329.7	ELECTRICAL	Cononsolidated Edison Company of New York, INC.	Intersect Proposed Route
329.9	COMMERCIAL	Jordan L. Mott	Within 100 feet of Construction Corridor
330	ELECTRICAL	Cononsolidated Edison Company of New York, INC.	Intersect Proposed Route
330.1	ELECTRICAL	Cononsolidated Edison Company of New York, INC.	Intersect Proposed Route
330.2	ELECTRICAL	Cononsolidated Edison Company of New York, INC.	Intersect Proposed Route
330.3	ELECTRICAL	Cononsolidated Edison Company of New York, INC.	Within 1000 feet of Construction Corridor
330.3	ELECTRICAL	Cononsolidated Edison Company of New York, INC.	Intersect Proposed Route
330.5	STATE OF NEW YORK	People of the State of New york	Within 500 feet of Construction Corridor
332.1	STATE OF NEW YORK	People of the State of New york	Intersect Proposed Route